LUDLUM MODEL 14C
GEIGER COUNTER

Revised: April 1991
Serial No. 81853 and Succeeding
Serial Numbers

LUDLUM MEASUREMENTS, INC.
501 OAK ST., P.O. BOX 810
SWEETWATER, TX 79556
915/235-5494 FAX: 915/235-4672

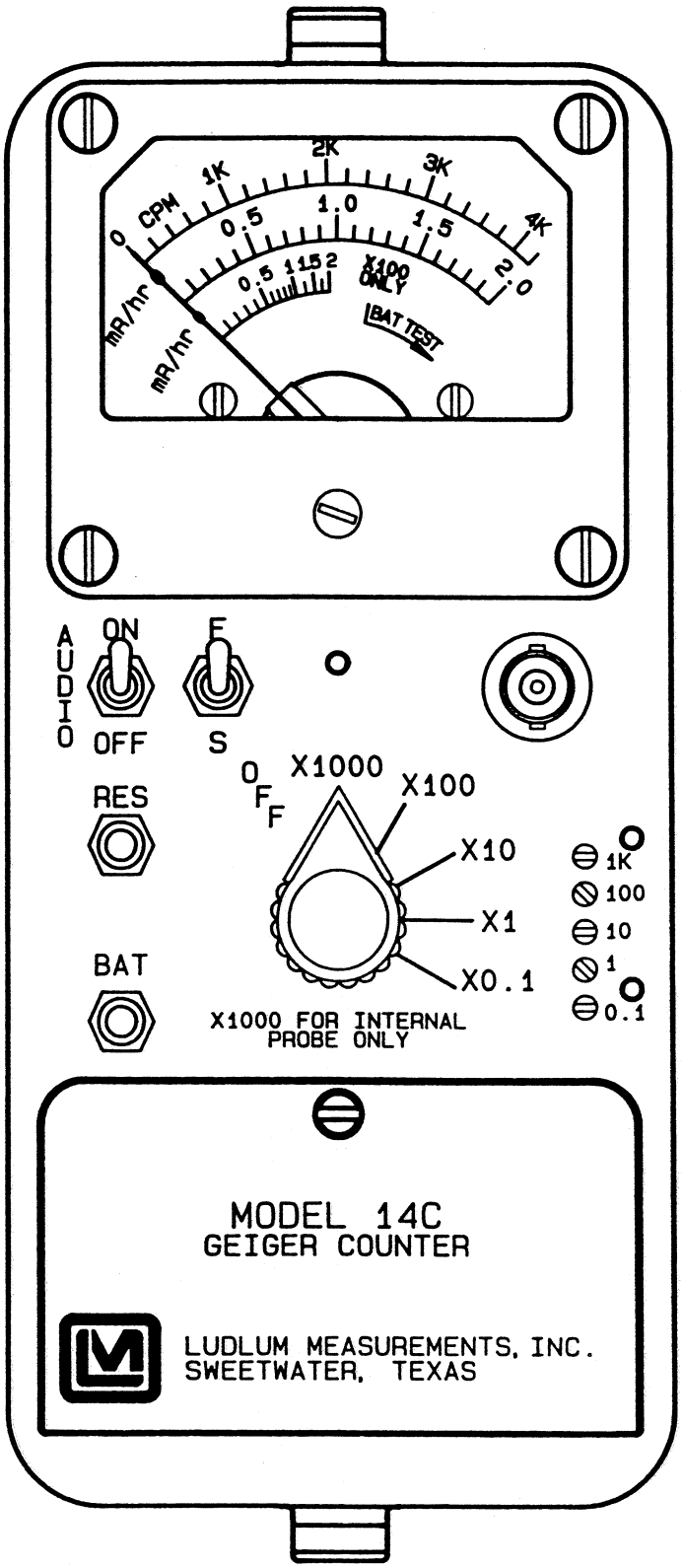

CHG	NO.		DWN	CHK	APP
DWN BK	DATE 4/4/91	CHK DATE	APP DATE		
TOL: SHOP STD ☐ OTHER		SCALE: FULL ☐ OTHER			
TITLE MODEL 14C GEIGER COUNTER					
LUDLUM MEASUREMENTS, INC. 501 OAK STREET SWEETWATER, TEXAS 79556		SERIES 363	SHEET 390		

TABLE OF CONTENTS

1. GENERAL 1

2. SPECIFICATIONS 1

3. DESCRIPTION OF CONTROLS AND FUNCTIONS 1

4. OPERATING PROCEDURES 2

5. CALIBRATION 2
   5.1 Detector Operating Point 2
   5.2 Range Calibration 2

6. MAINTENANCE 3

7. CHECKOUT PROCEDURE 3

PARTS LIST 4
   Model 14C Geiger Counter 4
      Circuit Board, Drawing 363 X 369 4
      Chassis Wiring Diagram, Drawing 363 X 371 5
      Calibration Board, Drawing 363 X 207 5
      Tube Board, Drawing 363 X 209 6
      Temperature Compensation Board, Drawing 363 X 327 6

1. GENERAL

The Model 14C is a ruggedized, portable, survey instrument that operates on two (2) standard "D" cell flashlight batteries. The instrument features a regulated high voltage power supply set at 900 volts and provides five linear ranges to 2000 mR/hr.

The unit body is made of ruggedized cast-aluminum, including the meter housing. The can is made of 0.090" aluminum. Other operating features of the instrument include a unimorph speaker, mounted to the instrument can with an audio ON-OFF, fast-slow meter response, meter reset button, a battery check button and a 6-position switch for selecting scale multiples of X0.1, X1, X10, X100 and X1000. Each range multiplier has its own calibration potentiometer.

This instrument is set for 900-volt G-M tube operation and is supplied with either a thin wall G-M tube or pancake G-M tube. An internal energy compensated high range detector is used for the X1000 range only.

The unit is operated with two flashlight batteries for operation from 32° to approximately 150°F. For temperature operation to 0°F, either very fresh alkaline batteries or rechargeable NiCd batteries may be used. Battery drain averages 30 milliamperes.

2. SPECIFICATIONS

- **BATTERY COMPLEMENT**: two standard, "D" size batteries
- **BATTERY LIFE**: average operation, 100 hours
- **HIGH VOLTAGE**: factory set at 900 volts
- **SENSITIVITY**: 30 millivolts ± 10 mV
- **INPUT IMPEDANCE**: 22k ohms
- **METER**: 1 mA with 2 1/2-inch scale, pivot-and-jewel movement
- **RANGE**: 5 linear ranges from 0 to 2000 mR/hr; meter scale presentation of 0-2 mR/hr with multiples of X0.1, X1, X10, X100, and X1000
- **LINEARITY**: plus or minus 5% of full scale
- **STABILITY**: less than 15% variance to end-point from the electronic parameter of the instrument
- **CONNECTOR**: series "C", UG706/U
- **DETECTORS**: external G-M detector for X0.1 through X100 ranges; internal energy compensated G-M detector for X1000 range
- **CALIBRATION CONTROLS**: individual recessed potentiometers for each range
- **AUDIO**: a built-in unimorph speaker with an ON-OFF switch
- **RESPONSE**: four seconds in fast "F" position and twenty-two seconds in slow "S" position for 90% of final meter reading
- **SIZE**: 10.67 cm (4.2") H X 8.9 cm (3.5") W X 21.6 cm (8.5") L, exclusive of handle
- **WEIGHT**: 1.36 kg (3 lbs.), less detector and batteries
- **FINISH**: computer-beige polyurethane enamel with silk-screened nomenclature

3. DESCRIPTION OF CONTROLS AND FUNCTIONS

- **Range Multiplier Selector Switch**: A six-position switch marked OFF, X1000, X100, X10, X1, X0.1. Moving the range selector switch to one of the range multiplier positions (X1000, X100, X10, X1, X0.1) provides the operator with an overall range of 0-2000 mR/hr. Multiply the scale reading by the multiplier for determining the actual scale reading.
- **AUDIO ON-OFF Toggle Switch**: In the ON position, the switch energizes the unimorph speaker, located on the left side of the instrument. The

frequency of the clicks is relative to the rate of the incoming pulses. The higher the rate, the higher the audio frequency. The audio should be turned OFF when not required to reduce battery drain.

- **Fast-Slow Toggle Switch:** Provides meter response. Selecting the fast, "F", position of the toggle switch provides 90% of final meter reading of four seconds. In slow,"S", position, 90% of final meter reading takes 22 seconds. Set on "F" for fast response and large meter deviation. "S" position should be used for slow response and damped meter deviation.

- **RES Button:** When depressed, provides a rapid means to drive the meter to zero.

- **BAT Check:** When depressed, provides a visual means of checking the battery charge status. The instrument must be turned on to do this check.

- **Range Calibration Adjustments:** Recessed potentiometers located under the calibration cover, on the right side of the front panel. These adjustment controls allow individual calibration for each range multiplier.

4. OPERATING PROCEDURES

✓ NOTE: To open the Battery Lid, twist the lid button counterclockwise 1/4 turn. To close, twist clockwise 1/4 turn.

○ Open the lid and install two "D" size batteries. Note (+) (-) marks on the inside of the lid. Match the battery polarity to these marks.

✓ NOTE: Center post of flashlight battery is positive. Close the battery box lid.

○ Turn the instrument range switch to X1000. Depress the BAT switch. The meter should deflect to the battery check position of the meter scale. If the meter does not respond, recheck to be certain that the batteries have proper polarity.

○ Expose the internal detector to a radiation check source. The speaker should click with the audio switch in the ON position.

○ Utilizing the external detector, move the range switch to the lower scales until a meter reading is indicated. The toggle switch labeled F-S should have fast response in "F" position, slow response in "S" position.

○ Press the RES switch. The meter should zero.

○ Check the calibration and proceed to use the instrument.

5. CALIBRATION

5.1 Detector Operating Point

○ Remove the instrument housing and adjust R4 for 900 volts.

✓ Note: Measure High Voltage with a Model 500 pulser or a High Impedance voltmeter with a high meg probe. If one of these instruments is not available use a voltmeter with a minimum of 1000 megohm input resistance.

○ Replace the instrument housing.

5.2 Range Calibration

○ Turn the instrument range multiplier switch to the appropriate range. Expose the detector to a calibrated gamma field and adjust the respective range potentiometer for proper reading.

○ Repeat the above procedure for the other scales.

6. MAINTENANCE

Instrument maintenance consists of keeping the instrument clean and periodically checking the batteries and the calibration.

An instrument operational check should be performed prior to each use by exposing the detector to a known source and confirming the proper reading on each scale.

Recalibration should be accomplished after any maintenance or adjustment of any kind has been performed on the instrument. Battery replacements are not considered to be maintenance and do not normally require the instrument to be recalibrated.

Ludlum Measurements recommends recalibration at intervals no greater than one year. Check the appropriate regulatory agencies regulations to determine required recalibration intervals.

The batteries should be removed and the battery contacts cleaned of any corrosion at least every three months. If the instrument has been exposed to a very dusty or corrosive atmosphere, more frequent battery servicing should be used.

Use a spanner wrench to unscrew the battery contact insulators, exposing the internal contacts and battery springs. Removing the handle will facilitate access to these contacts.

NOTE

NEVER STORE THE INSTRUMENT OVER 30 DAYS WITHOUT REMOVING BATTERIES. ALTHOUGH THIS INSTRUMENT WILL OPERATE AT VERY HIGH AMBIENT TEMPERATURES, BATTERY SEAL FAILURE CAN OCCUR AT TEMPERATURES AS LOW AS 100° FAHRENHEIT.

7. CHECKOUT PROCEDURE

☐ Remove the instrument housing from the can by raising the clip levers on the ends of the can. Pull the housing from the can. Pull the black and white wires coming from the unimorph speaker off the board.

☐ Remove the detector connections (unsolder wires).

☐ Check the voltage at pin 8 of U6 on the circuit board with respect to ground. It should be in the range of 8.0 to 9.4 volts. If not, change R34 to bring the voltage within this range (R34 smaller to decrease or larger to increase).

☐ Check the voltage across CR11 (LM385Z1.2). It should be approx. 1.22 volts D.C.

☐ Check the signal path through the circuit. (See schematics 363 X 369 and 363 X 371.)

☐ After repair, set the high voltage at 900 volts, reconnect the detector and audio, reassemble the can and recalibrate the instrument.

PARTS LIST

Ref. No.	Description	Part No.
Model 14C Geiger Counter		
UNIT	Completely Assembled M14C Geiger Counter	48-1611
Circuit Board, Drawing 363 X 369		
BOARD	Assembled Circuit Board	5363-504
• **CAPACITORS**		
C2	0.01μF, 100V, C	04-5523
C3	470pF, 100V, C	04-5555
C5	0.01μF, 100V, C	04-5523
C6	22μF, 15V, OST	04-5579
C7-C8	100μF, 10V, DST	04-5576
C9	4.7μF, 10V, OST	04-5578
C10	0.1μF, 100V, C	04-5521
C11	4.7μF, 10V, OST	04-5578
C12	2.2μF, 25V, DT	04-5559
C13	0.01μF, 100V, C	04-5523
C14	100μF, 10V, C	04-5576
C15	100μF, 10V, OST	04-5576
C16	1μF, 35V, OST	04-5575
C17	0.1μF, 100V, C	04-5521
C18	100pF, 3kV, OST	04-5532
C19	0.0027μF, 3kV, C	04-5520
C20-23	0.0015μF, 3kV, C	04-5518
C24	0.01μF, 100V, C	04-5523
C25	100pF, 100V, C	04-5527
• TRANSISTORS		
Q4	MPS6534	05-5763
Q5-Q6	2N3904	05-5755
Q7	MPS6534	05-5763
• INTEGRATED CIRCUITS		
U1	CA3096	06-6023
U2	CD4093	06-6030
U3	CD4098	06-6066
U4	CA3096	06-6023
U5-U6	LM358	06-6024
• DIODES		
CR2-CR5	1N4007	07-6274
CR6-CR10	1N4148	07-6272
CR11	LM385Z1.2V	05-5808

Ref.No.	Description	Part No.
• RESISTORS		
R1	22k	10-7070
R2	2.7M	10-7029
R3	10k	10-7016
R4	470k	10-7026
R5	1M	10-7028
R6	18k	10-7018
R7	1M	10-7028
R8	1M	10-7028
R9	3.3k	10-7013
R10	560k	10-7027
R11	10k	10-7016
R12	75K	10-7074
R13	1M	10-7028
R14	2.7M	10-7029
R15	82k	10-7022
R17	22k	10-7070
R21	8.2k	10-7015
R22	82k	10-7022
R23	100k	10-7023
R28	SAT	
R29	330 OHM	10-7053
R31	75k	10-7074
R32	10k	10-7016
R33	4.7k	10-7014
R34	100k 1%	12-7557
R35	16.5k 1%	12-7541
R36	10k	10-7016
R37	1k	10-7009
R38	200 OHM	10-7006
R39	10 MEG	10-7031
R40	1M	10-7028
R41	SAT (TYPICAL 2.2k)	10-7012
R51	1 GIG OHM	12-7686
• TRANSFORMERS		
T1	L8050	40-0902
T2	LVPS	40-0944
• MISCELLANEOUS		
*	RECEPTACLE (7 ea.) Cloverleaf 011-6809	18-8771
*	RECEPTACLE Weldon 16-06-0007 Small	18-8792
*	RECEPTACLE Weldon 16-06-0004 Large	18-8795

Chassis Wiring Diagram, Drawing 363 X 371

- AUDIO

DS1	UNIMORPH 60690	21-9251

- CONNECTOR

P1	SERIES "C" UG706/U	13-7751

- SWITCHES

S1	CENTRALAB PA6021046	08-6542
S2	F/S MST 105-D	08-6511
S3	MST 105-D	08-6511
S4	30-1 P/B	08-6517
S5	P/B 923	08-6518

- BATTERY

BT1-BT2	"D" DURACELL BATTERY	21-9313

- CAPACITORS

C3-C4	0.0015μF, 3kV, C	04-5518
C5-C6	100pF, 3kV, C	04-5532

- RESISTORS

R4	100k TRIMMER POT	09-6789
R7-R9	1M	10-7028
R10-R11	1G	12-7686
R12-R13	1M	10-7028

- MISCELLANEOUS

*	M14C BATTERY BOX LID W/LATCH SET	9363-241
*	BATTERY CONTACT SET	40-1707
M1	PORT BEZEL W/TEMP ASSY	4363-465
*	PORTABLE CAN ASSY	4363-189
*	M14C CASTING	9363-240
V1	LND72611 DETECTOR	01-5011
*	M14C MAIN HARNESS	8062-081/1
*	PORTABLE KNOB	08-6613
*	M14C: M5 RIBBON HARNESS	8363-058
*	PORT. BEZEL GLASS W/O SCREWS	4363-352
*	PORTABLE METER FACE	7363-136
*	METER MOVEMENT (1 mA)	15-8030
*	UNIMORPH W/WIRES, O'RING	40-0034
*	PORT. LATCH KIT W/O BATTERY LID	4363-349
*	PORTABLE CALIBRATION COVER W/SCREWS	9363-200
*	PORTABLE HANDLE (ROLLED) W/SCREWS	7363-139
*	PORTABLE HANDLE FOR CLIP W/SCREWS	7363-203
*	REPLACEMENT CABLE (STD 39")	40-1004
*	CLIP (44-3 TYPE) W/SCREWS	7002-026-01
*	CLIP (44-7 TYPE) W/SCREWS	7010-007-01
*	CLIP (44-6 TYPE) W/SCREWS	7010-008-01

Calibration Board, Drawing 363 X 207

BOARD	Assembled Calibration Board	5363-235

- CAPACITORS

C1	0.0047μF, 100V, C	04-5564
C2	0.047μF, 100V, C	04-5568

- RESISTORS

R1	250k TRIMMER POT	09-6819
R2	100k TRIMMER POT	09-6813
R3-R5	1M TRIMMER POT	09-6814

- RESISTOR NETWORKS

RN1	10k SIP	12-7727

- MISCELLANEOUS

P1	STRIP-102888-5 10PIN M	13-8110

Tube Board, Drawing 363 X 209

BOARD	Assembled Tube Board	5206-055

- CAPACITORS

C3	0.0015μF, 3kV, C	04-5518
C4	0.0015μF, 3kV, C	04-5518
C5	100pF, 3kV, C	04-5532
C6	100pF, 3kV, C	04-5532

- RESISTORS

R4	100k TRIMMER POT	09-6813
R7-R9	1M	10-7028
R10-R11	1G	12-7686
R12-R13	1M	10-7028

- MISCELLANEOUS

V1	GM TUBE-LND 72611 (NO SHIELD)	01-5011
*	TIN SHIELD FOR TUBE (01-5011) (FOR ENERGY COMPENSATED TUBE)	7206-008-07

Temperature Compensation Board, Drawing 363 X 327

BOARD	Assembled Temperature Compensation Board	5363-440

- THERMISTORS

RT1-RT2	RL1006-98.4-59-D1	07-6332

- RESISTOR

R1	634 Ohm, 1/3 W, 1%	12-7808

DRAWINGS AND DIAGRAMS

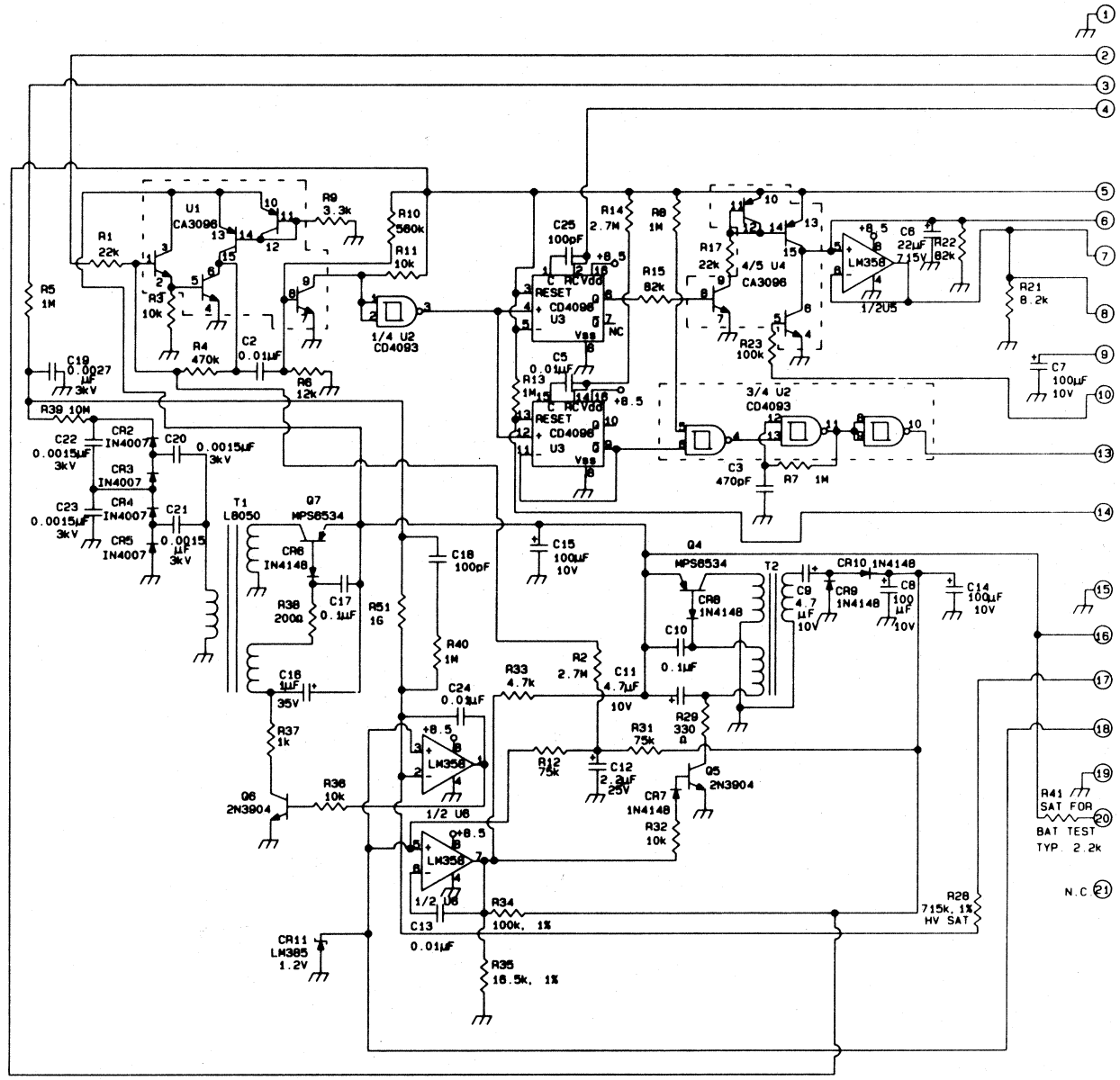

NO.	DEVICE	POWER CONNECTIONS		
			+8.5	GND
U1	CA3096			16
U2	CD4093		14	7
U3	CD4098		16	8
U4	CA3096			16
U5	LM358		8	4
U6	LM358		8	4

UNUSED CONNECTIONS

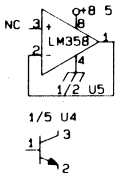

DESC: CIRCUIT BOARD SCHEMATIC	
MODEL: 14-C	
PART #: 5363-504	
DWN: BK	DATE: 3/29/91
DSGN:	DATE:

CHG	NO.		DWN	CHK	APP
DWN BK	DATE 3/29/91	CHK DATE	APP DATE		
TOL: SHOP STD OTHER		SCALE: FULL OTHER			
TITLE MODEL 14C GEIGER COUNTER					
LUDLUM MEASUREMENTS, INC 501 OAK STREET SWEETWATER, TEXAS 79556		SERIES 363	SHEET 369		

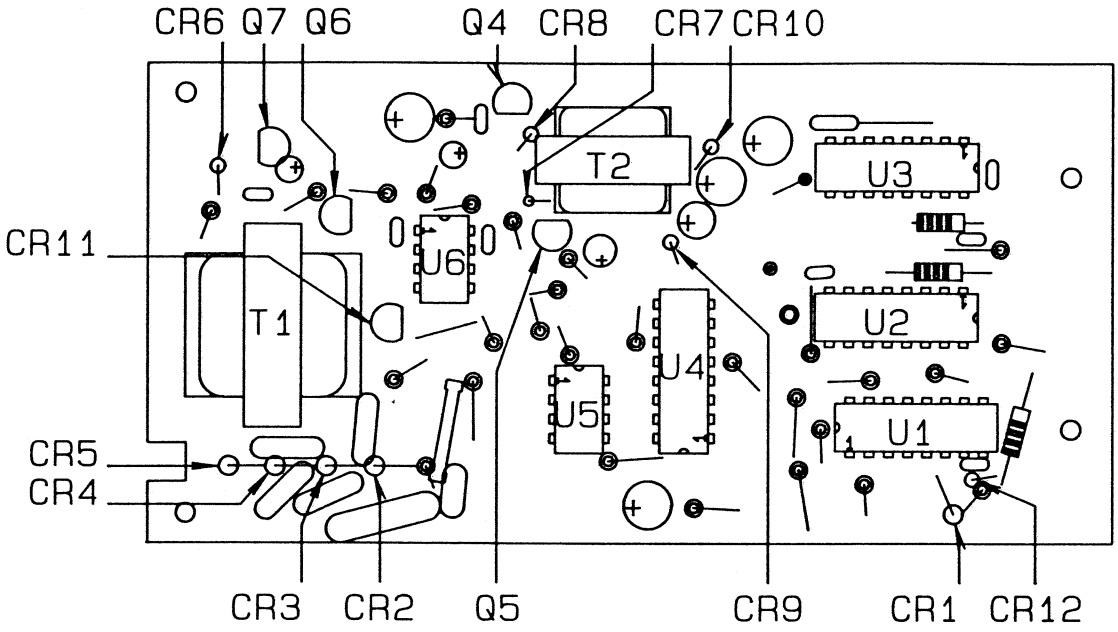

DESC: MODEL 14C CIRCUIT BOARD	
BOARD #: 5363-504	
DWN: BK	DATE: 3/29/91
DSGN:	DATE:

CHG	NO.					DWN	CHK	APP
DWN BK	DATE 3/29/91	CHK	DATE		APP	DATE	
TOL: SHOP STD ☐ OTHER				SCALE: FULL ☐ OTHER			
TITLE MODEL 14C GEIGER COUNTER							
LUDLUM MEASUREMENTS, INC. 501 OAK STREET SWEETWATER, TEXAS 79556				SERIES 363		SHEET 370	

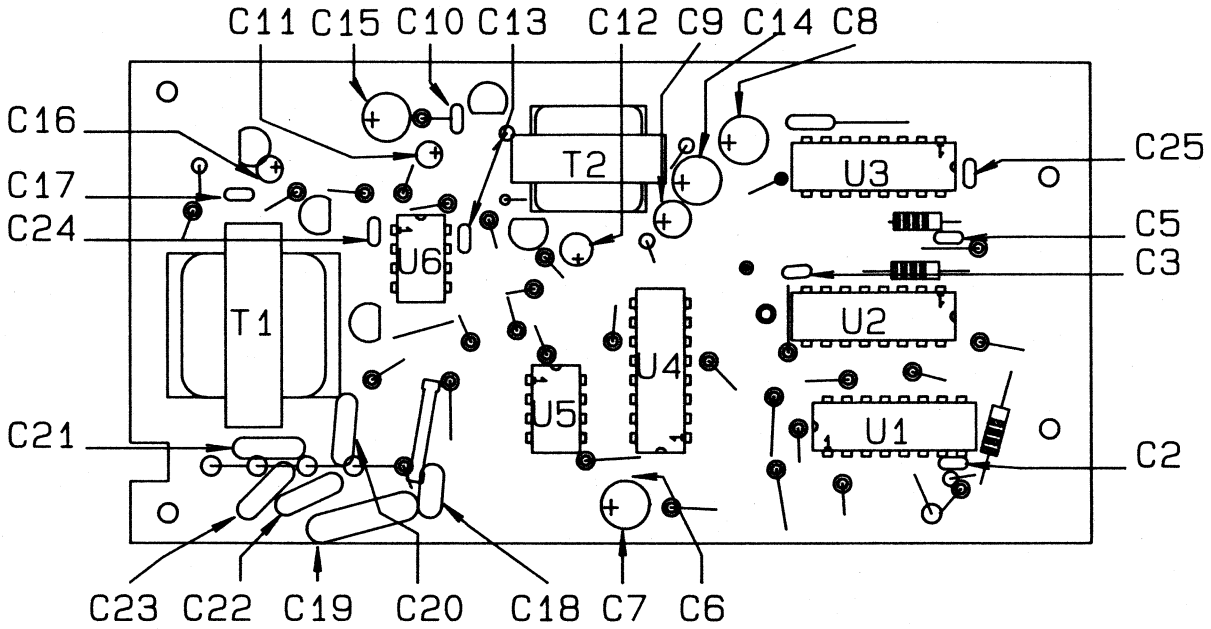

DESC: MODEL 14C CIRCUIT BOARD	
BOARD #: 5363-504	
DWN: BK	DATE: 3/29/91
DSGN:	DATE:

CHG	NO.					DWN	CHK	APP
DWN BK	DATE 3/29/91	CHK	DATE		APP	DATE	
TOL: SHOP STD ☐ OTHER				SCALE: FULL ☐ OTHER			
TITLE MODEL 14C GEIGER COUNTER							
LUDLUM MEASUREMENTS, INC. 501 OAK STREET SWEETWATER, TEXAS 79556				SERIES 363		SHEET 370A	

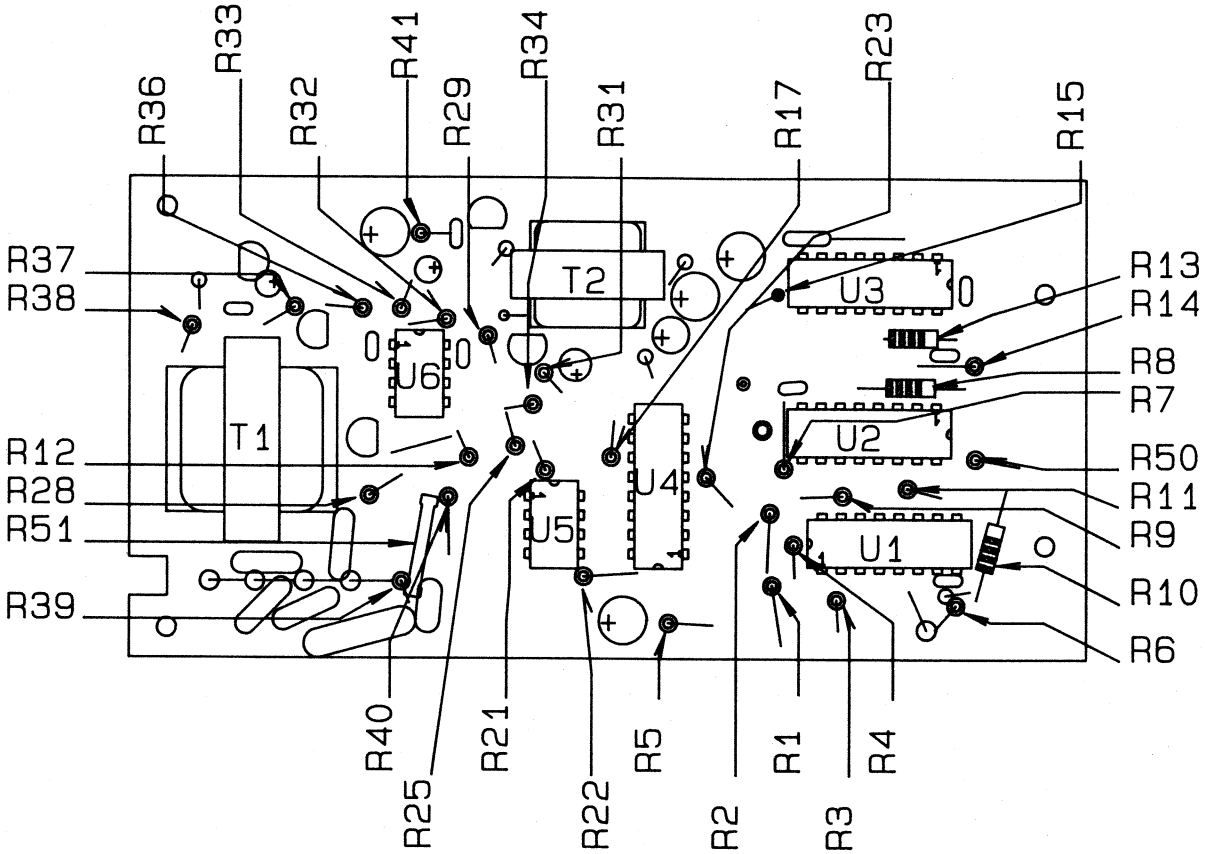

DESC: MODEL 14C CIRCUIT BOARD	
BOARD #: 5363-504	
DWN: BK	DATE: 3/29/91
DSGN:	DATE:

CHG	NO.			DWN	CHK	APP
DWN BK	DATE 3/29/91	CHK	DATE	APP	DATE	
TOL: SHOP STD ☐ OTHER			SCALE: FULL ☐ OTHER			
TITLE MODEL 14C GEIGER COUNTER						
LUDLUM MEASUREMENTS, INC. 501 OAK STREET SWEETWATER, TEXAS 79556			SERIES 363	SHEET 370B		

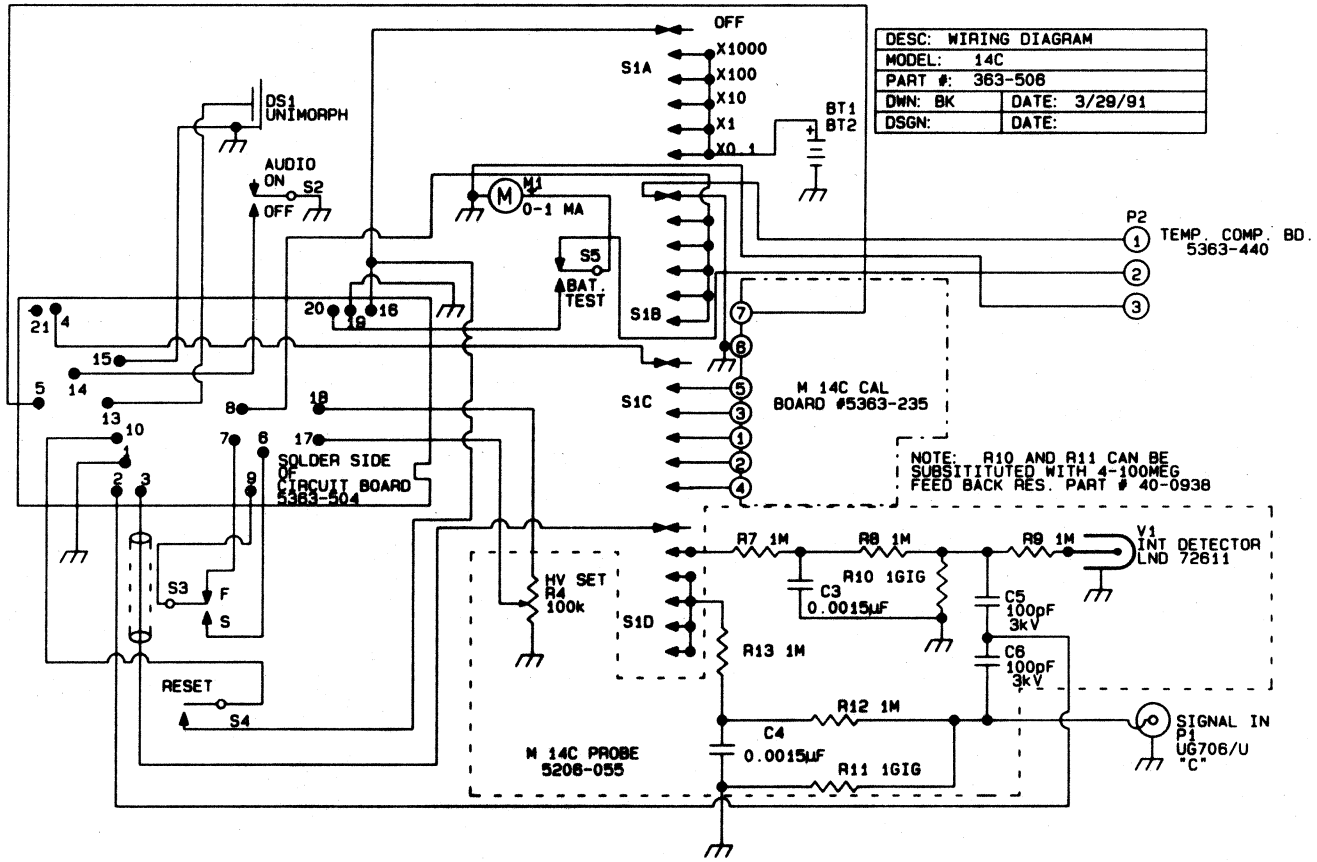

DESC: WIRING DIAGRAM	
MODEL: 14C	
PART #: 363-506	
DWN: BK	DATE: 3/29/91
DSGN:	DATE:

CHG	NO.					DWN	CHK	APP
DWN BK	DATE 3/29/91	CHK DW	DATE 3-29-91	APP JGB	DATE 3-29-91			

TOL: SHOP STD ☐ OTHER

SCALE: FULL ☐ OTHER

TITLE MODEL 14C GEIGER COUNTER

LUDLUM MEASUREMENTS, INC.
501 OAK STREET
SWEETWATER, TEXAS 79556

SERIES 363

SHEET 371

DESC: M14C CALIBRATION BOARD	
BOARD #: 5363-235	
DWN: BK	DATE: 6/25/91
DSGN: DL	DATE: 8/87

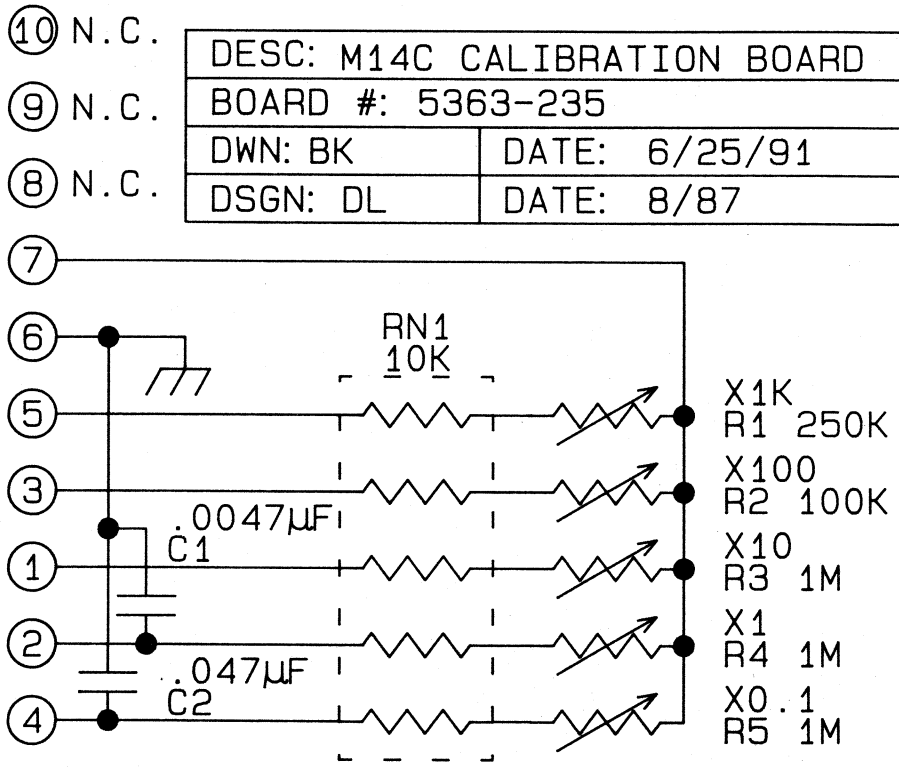

CHG	NO.				DWN	CHK	APP
DWN BK	DATE 6/25/91	CHK	DATE	APP	DATE		
TOL: SHOP STD ☐ OTHER				SCALE: FULL ☐ OTHER			
TITLE MODEL 14C GEIGER COUNTER							
LUDLUM MEASUREMENTS, INC. 501 OAK STREET SWEETWATER, TEXAS 79556				SERIES 363		SHEET 207C	

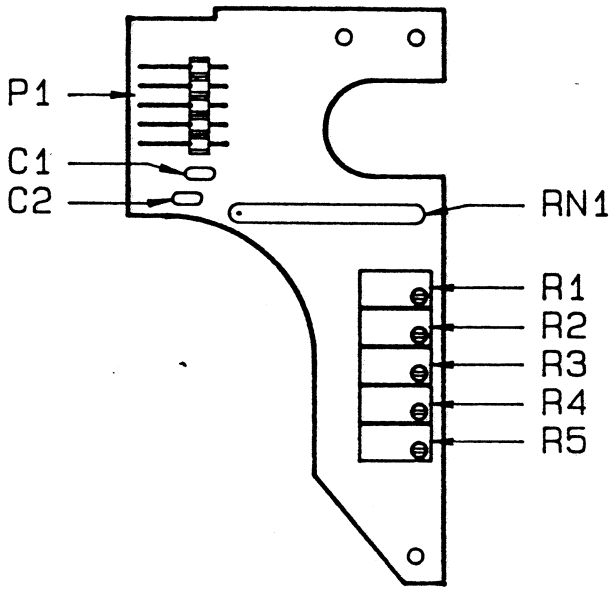

DESC: CALIBRATION BOARD	
MODEL: 14C	
PART #: 5363-235	
DWN: CKB	DATE: 10/6/89
DSGN:	DATE:

CHG	NO.					DWN	CHK	APP
DWN CKB	DATE 10/6/89	CHK	DATE		APP	DATE	
TOL: SHOP STD ☐ OTHER				SCALE: FULL ☒ OTHER			
TITLE MODEL 14C CAL BOARD							
LUDLUM MEASUREMENTS, INC. 501 OAK STREET SWEETWATER, TEXAS 79556				SERIES 383		SHEET 208	

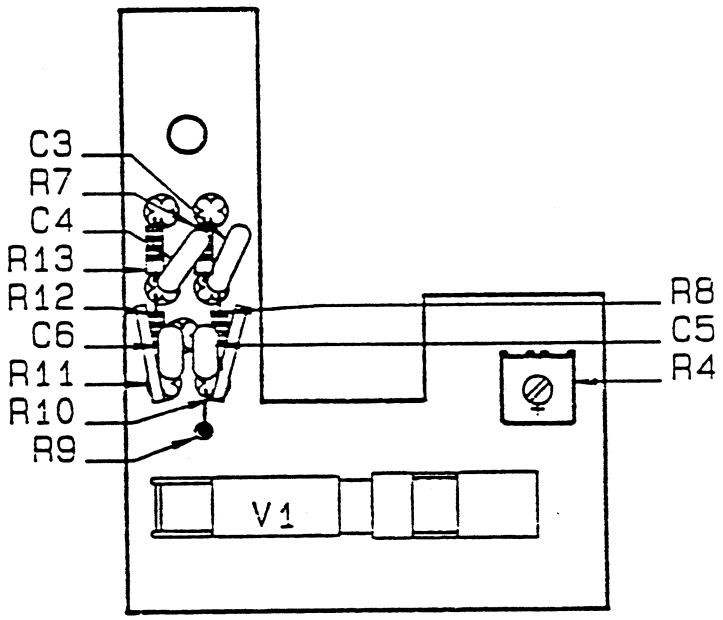

DESC: TUBE BOARD	
MODEL: 14C	
PART #: 5206-055	
DWN: HH	DATE: 1/19/88
DSGN:	DATE:

CHG NO.				DWN	CHK
DWN HH	DATE 1/19/88	CHK	DATE	APP	DATE
TOL: SHOP STD ±0.5 27150		SCALE: FULL 27150			
TITLE M 14C TUBE BOARD					
LUDLUM MEASUREMENTS, INC. 501 OAK STREET SEGUIN, TEXAS 78155		DWG. NO. 43		SHEET 6A	

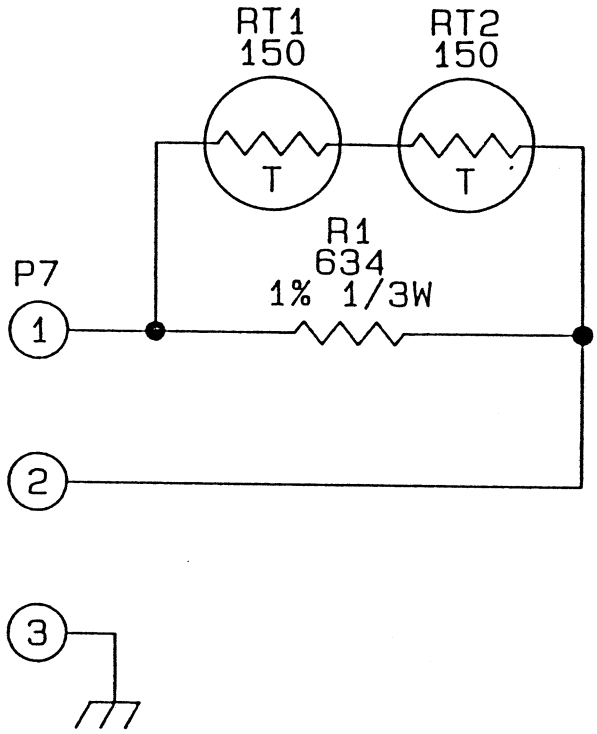

DESC: TEMPERATURE COMP. BOARD	
MODEL: PORTABLES	
PART #: 5363-440	
DWN: CKB	DATE: 08/21/90
DSGN:	DATE:

CHG	NO.					DWN	CHK	APP
DWN CKB	DATE 08/21/90	CHK	DATE 8-21-90	APP	DATE 8-21-90		
TOL: SHOP STD ☐ OTHER				SCALE: FULL ☒ OTHER			
TITLE TEMPERATURE COMPENSATION BD.							
LUDLUM MEASUREMENTS, INC. 501 OAK STREET SWEETWATER, TEXAS 79556				SERIES 383		SHEET 327	

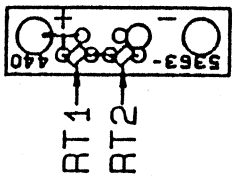

TOP SIDE OF BOARD

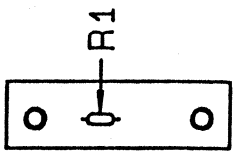

BACK SIDE OF BOARD

DESC: TEMP COMP BOARD	
MODEL: ALL PORTABLES	
PART #: 5363-440	
DWN: PW	DATE: 8/21/90
DSGN: PW	DATE: 8/21/90

CHG	NO.					DWN	CHK	APP
DWN PW	DATE 8/21/90	CHK	DATE		APP	DATE	
TOL: SHOP STD ☐ OTHER			SCALE: FULL ☐ OTHER				
TITLE TEMP COMPENSATION BOARD							
LUDLUM MEASUREMENTS, INC. 501 OAK STREET SWEETWATER, TEXAS 79556				SERIES 363		SHEET 329	